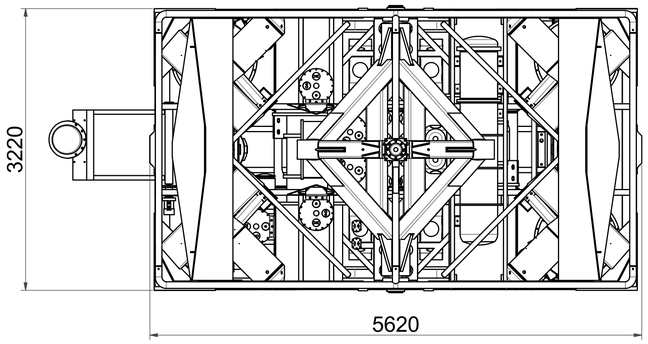

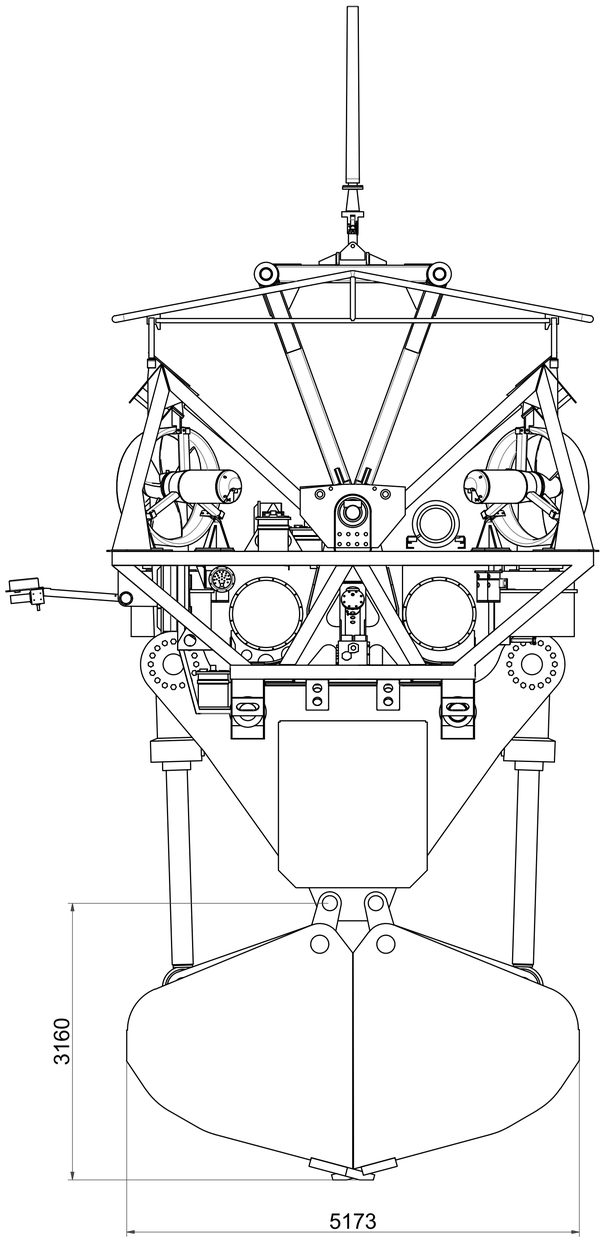

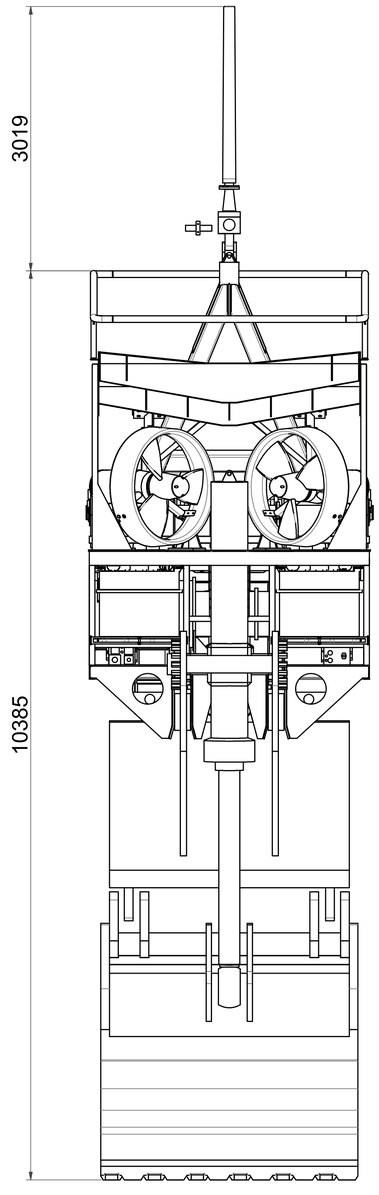

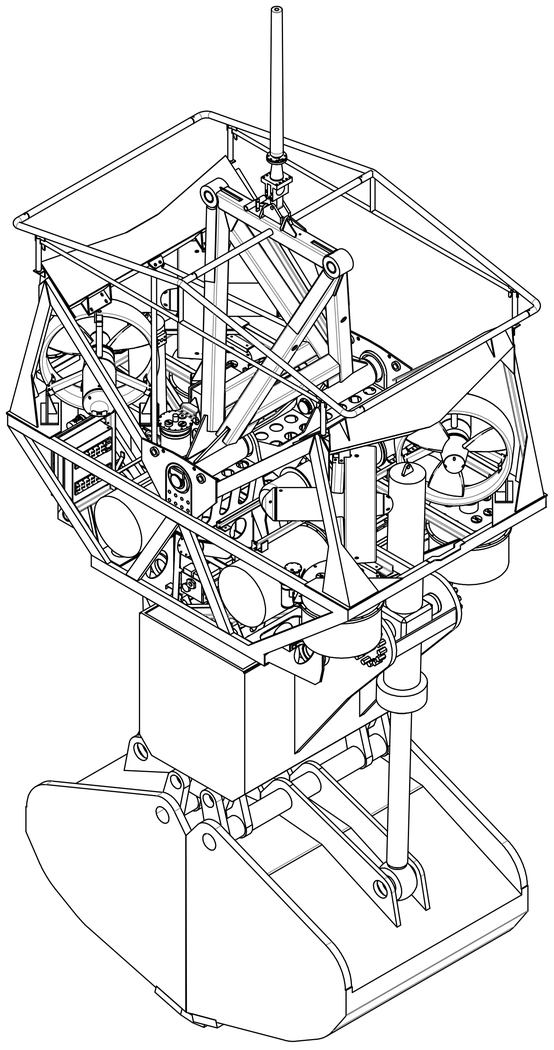

seatools